Fixed Dome Mount

B-WM03-D-IN-BLACK

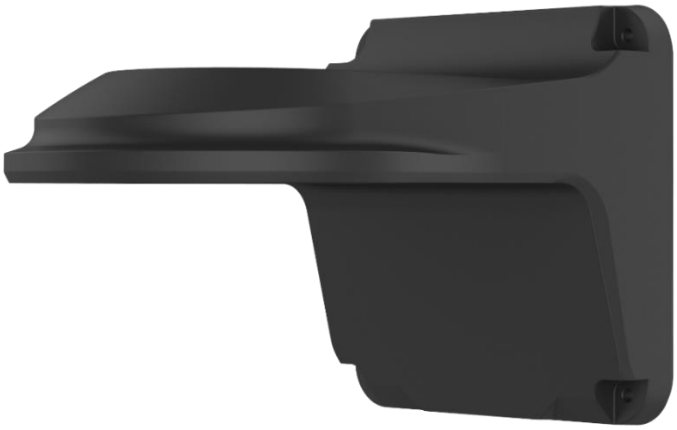

Specifications

Bracket	B-WM03-D-IN-BLACK
Application	Wall installation for IPC-T1EX-B Series and IPC-T1PX-B Series fixed dome camera
Dimensions	126mmx127mmx183mm (4.96” x5” x7.20”)
Weight	0.52kg(1.15lb)
Material	Aluminum alloy

Dimensions

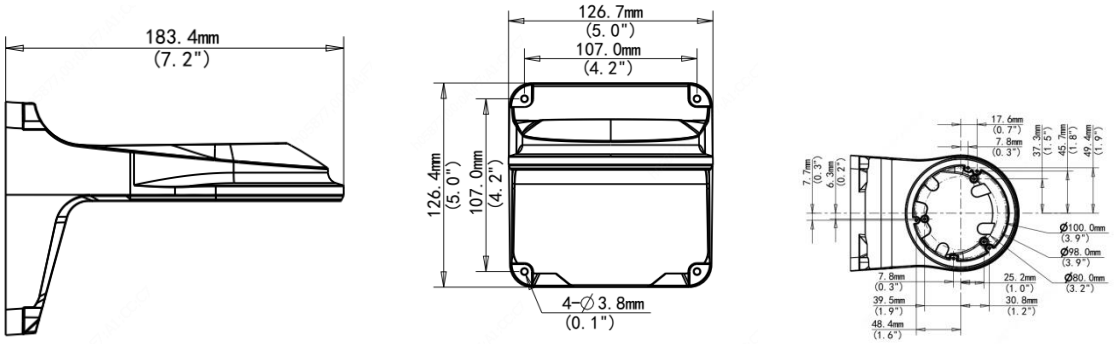

www.uniview.com/uniarch

©2021 Zhejiang Uniview Technologies Co.,Ltd. All rights reserved.

*Product specifications and availability are subject to change without notice.